mm inch

Roller lever type

AZ7121

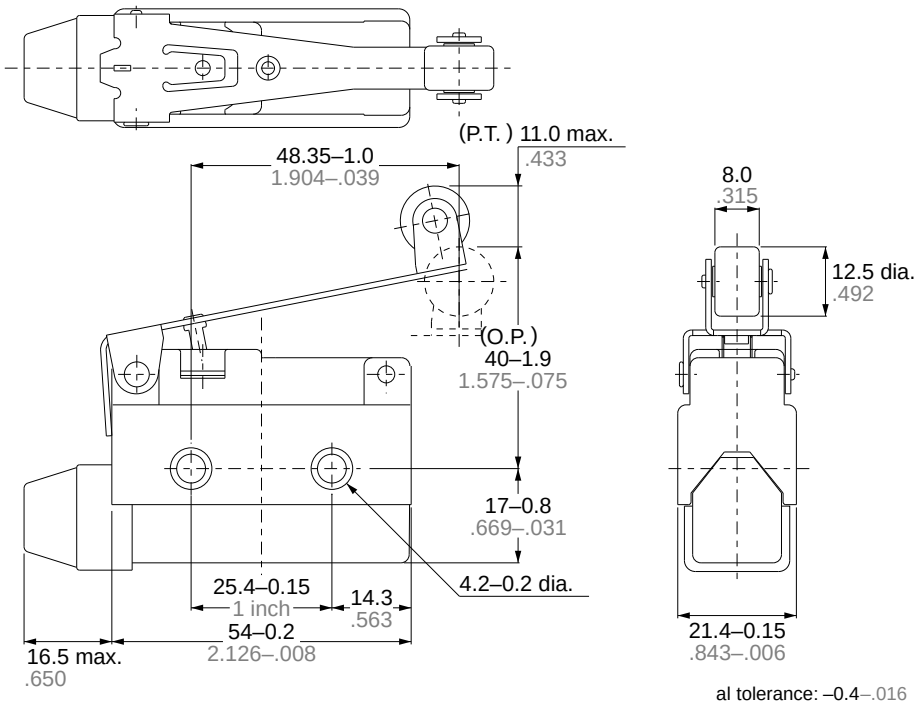

STANDARDS

Standards	Applicable product	Part No.
UL	File No. : E-122222 Ratings : 10A 250V AC Product type : Standard type only	Order by standard part No.
CSA	File No. : LR55880 Ratings : 10A 250V AC Product type : Standard type only	
TÜV	File No. : J9551204 Ratings : AC-15 2A/250V onwards Product type : Standard type only	

SPECIFICATIONS

1. Contact Rating

Rated control voltage \ Load	Resistive load (cosϕ=1)	Inductive load (cosϕ=0.4)	Motor or lamp load	
			N.C. contact	N.O. contact
125V AC	10A	6A	3A	1.5A
250V AC	10A	4A	1.5A	1A
115V DC	0.4A	0.05A	—	—

2 Contact Characteristics

Contact arrangement		1 Form C
Initial contact resistance, max.		15mΩ* (By voltage drop 6 to 8V DC at rated current)
Initial insulation resistance (At 500V DC)		Min. 100 MΩ
Initial breakdown voltage		1,500 Vrms for 1 min Between non-consecutive terminals 2,000 Vrms for 1 min Between dead metal parts and each terminal 2,000 Vrms for 1 min Between ground and each terminal
Shock resistance	In the free position	Max. 98m/s^2 {10G}
	In the full operating position	Max. 294m/s^2 {30G}
Vibration resistance		55 Hz, double amplitude of 1.5 mm
Expected life (Min. operation)	Mechanical	10^7 (at 50 cpm)
	Electrical	2 x 10^5 (at 20 cpm)
Ambient temperature/Ambient humidity		-20 to +60°C -4 to +140°F /Max. 95% R.H. (at 20°C 68°F)
Max. operating speed		120 cpm

*The resistance of a copper wire is not included.

3.EN60947-5-1 performance

Item	Rating
Rated insulation voltage (Ui)	250VAC
Rated impulse withstand voltage (Uimp)	2.5kV
Switching over voltage	2.5kV
Rated enclosed thermal current (Ithe)	10A
Conditional short-circuit current	100A
Short-circuit protection device	10A fuse
Protective construction	IP64 (switch)
Pollution degree	3

DATA
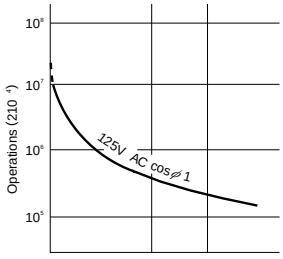
1. Life curve